1-833 / 1-834

Workbench LD Mobile 800x600 / 800x800

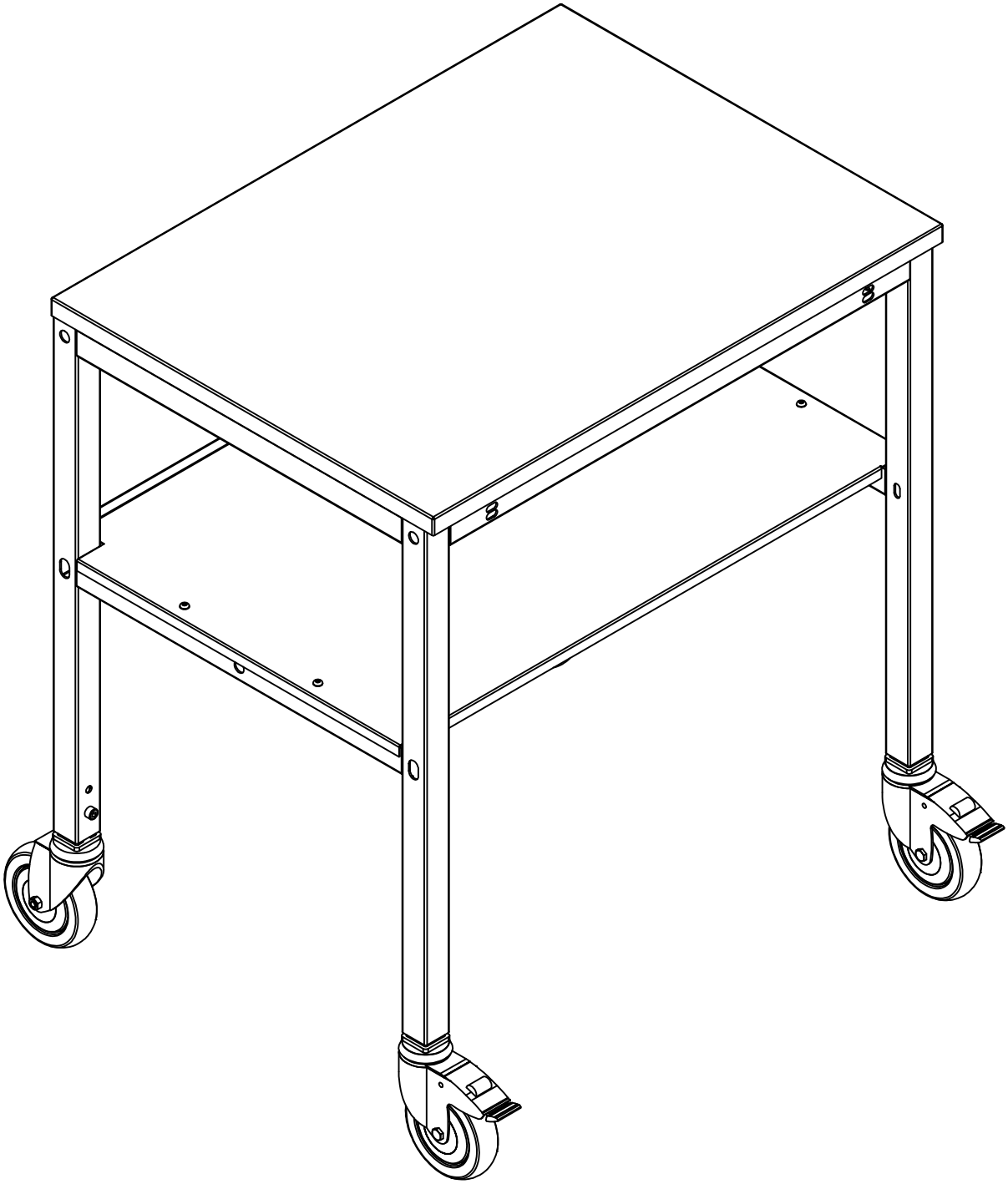

1

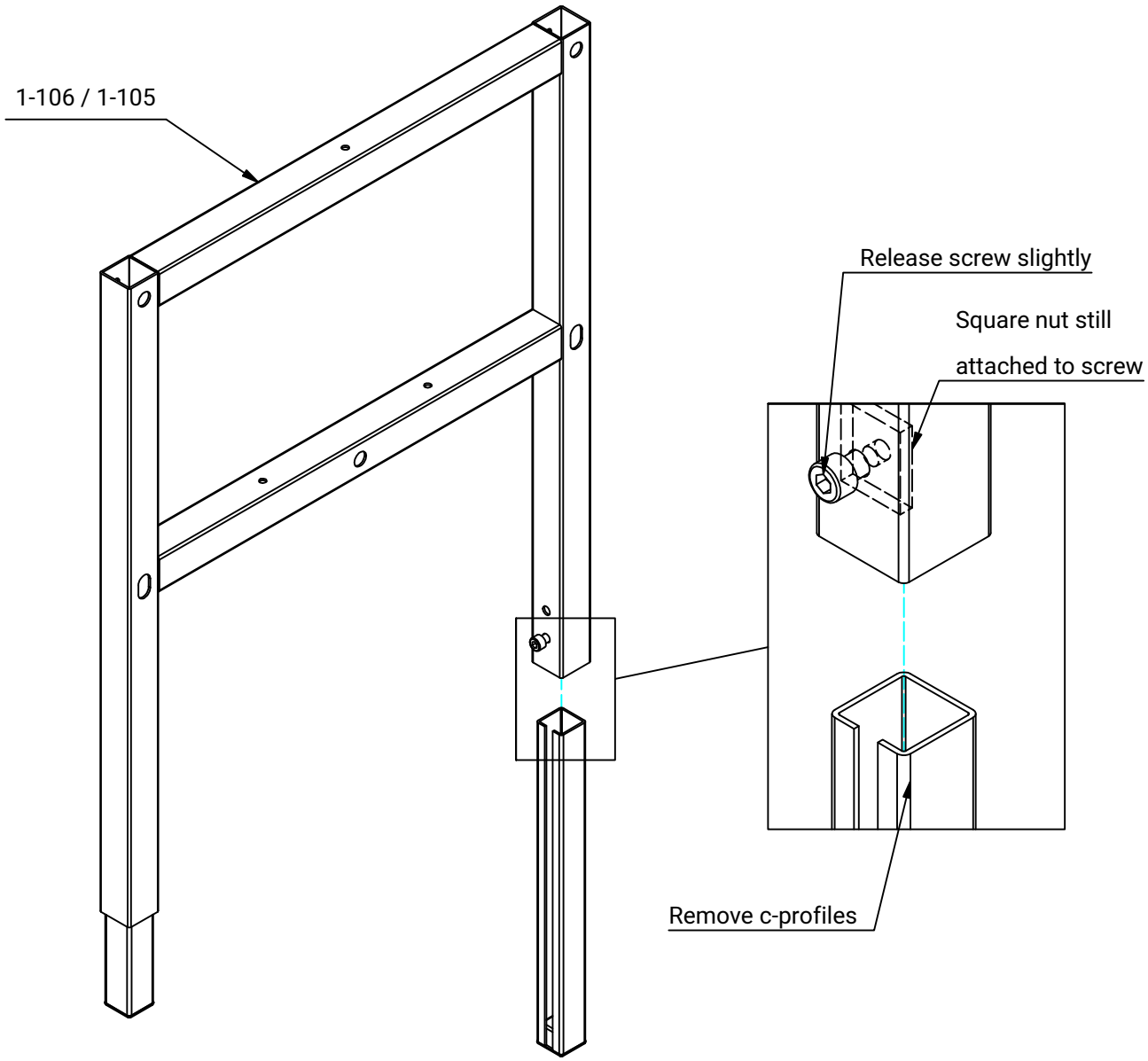
1-106 / 1-105
Release screw slightly
Square nut still
attached to screw
Remove c-profiles

2

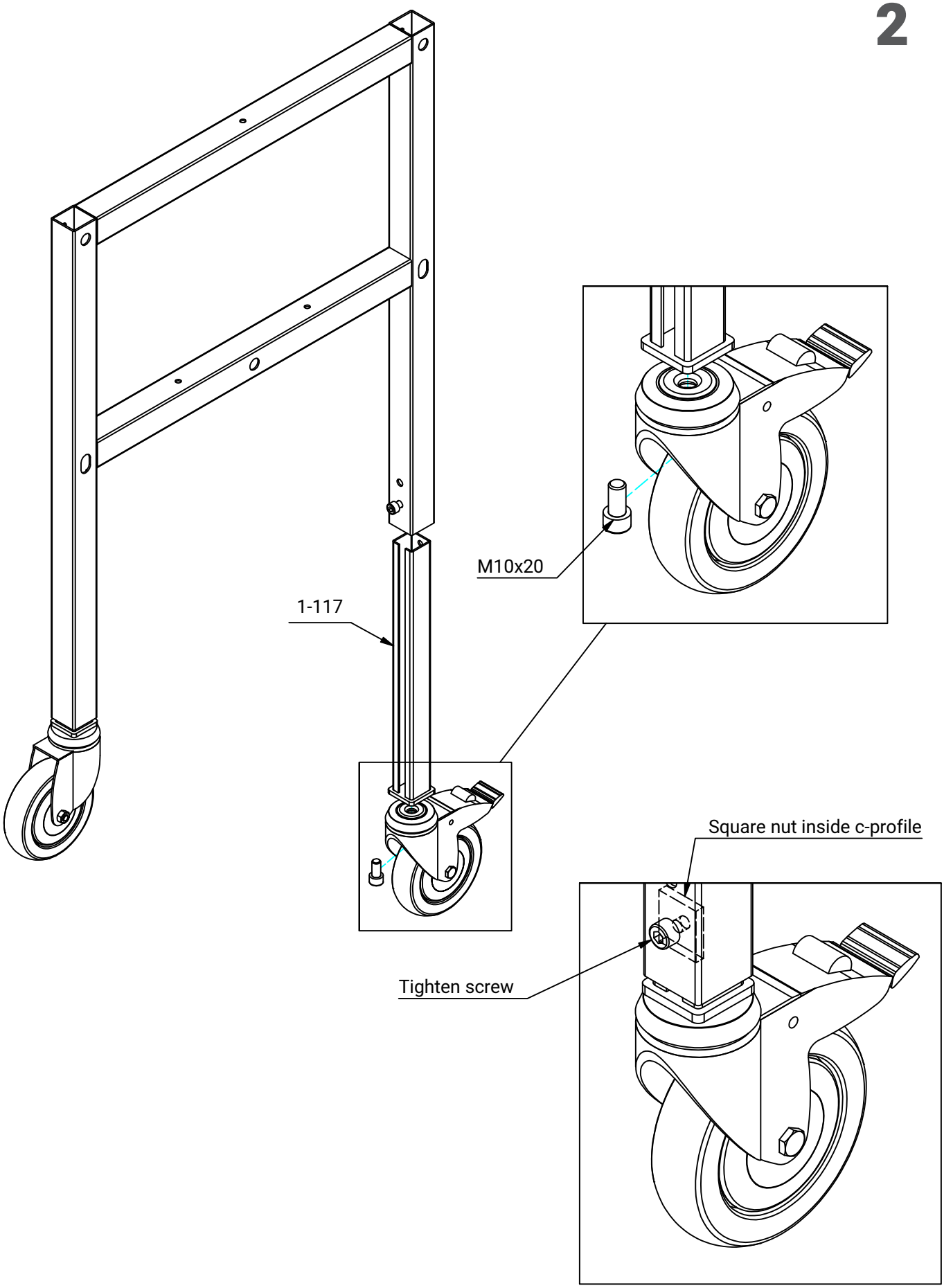

3

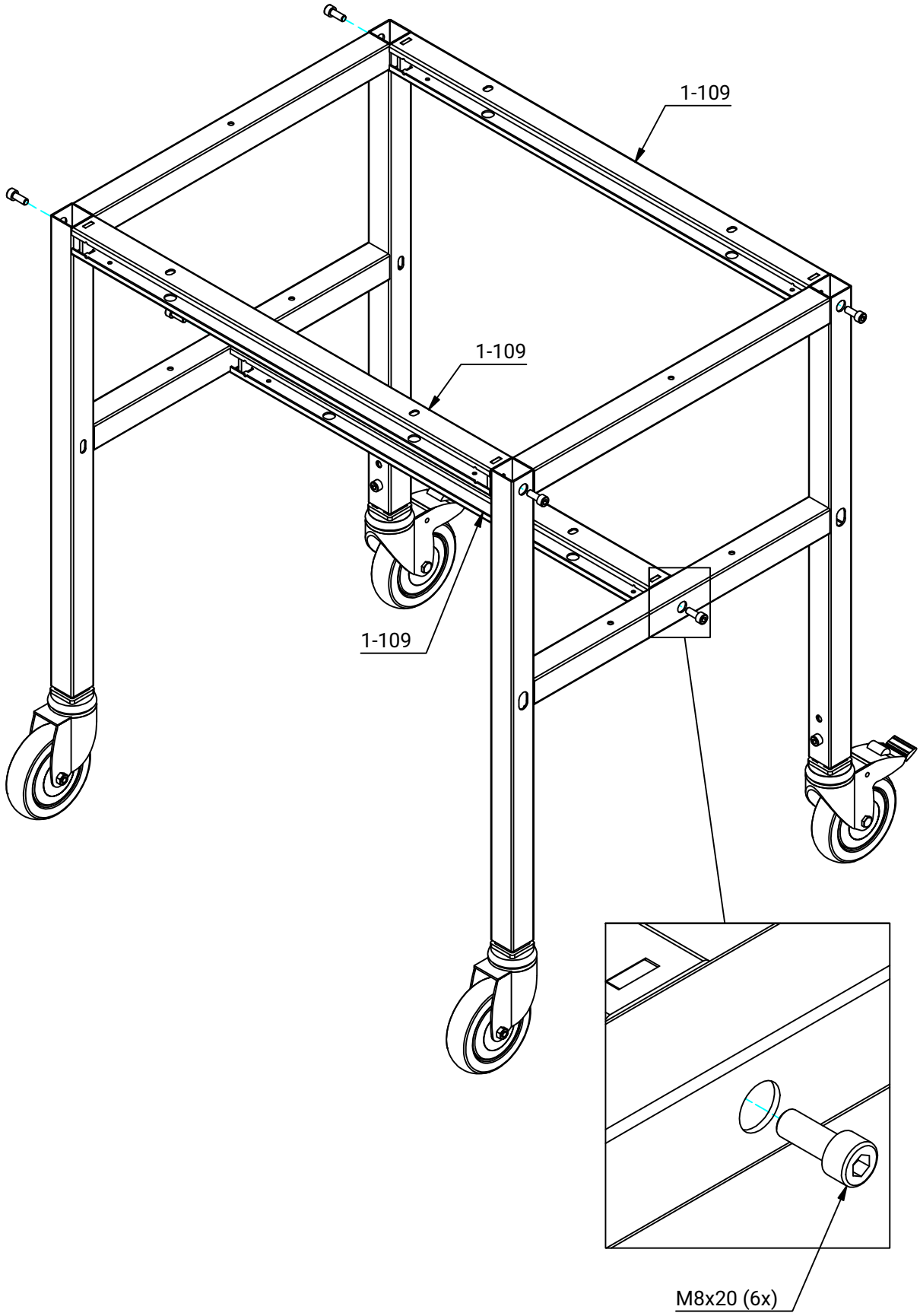

4

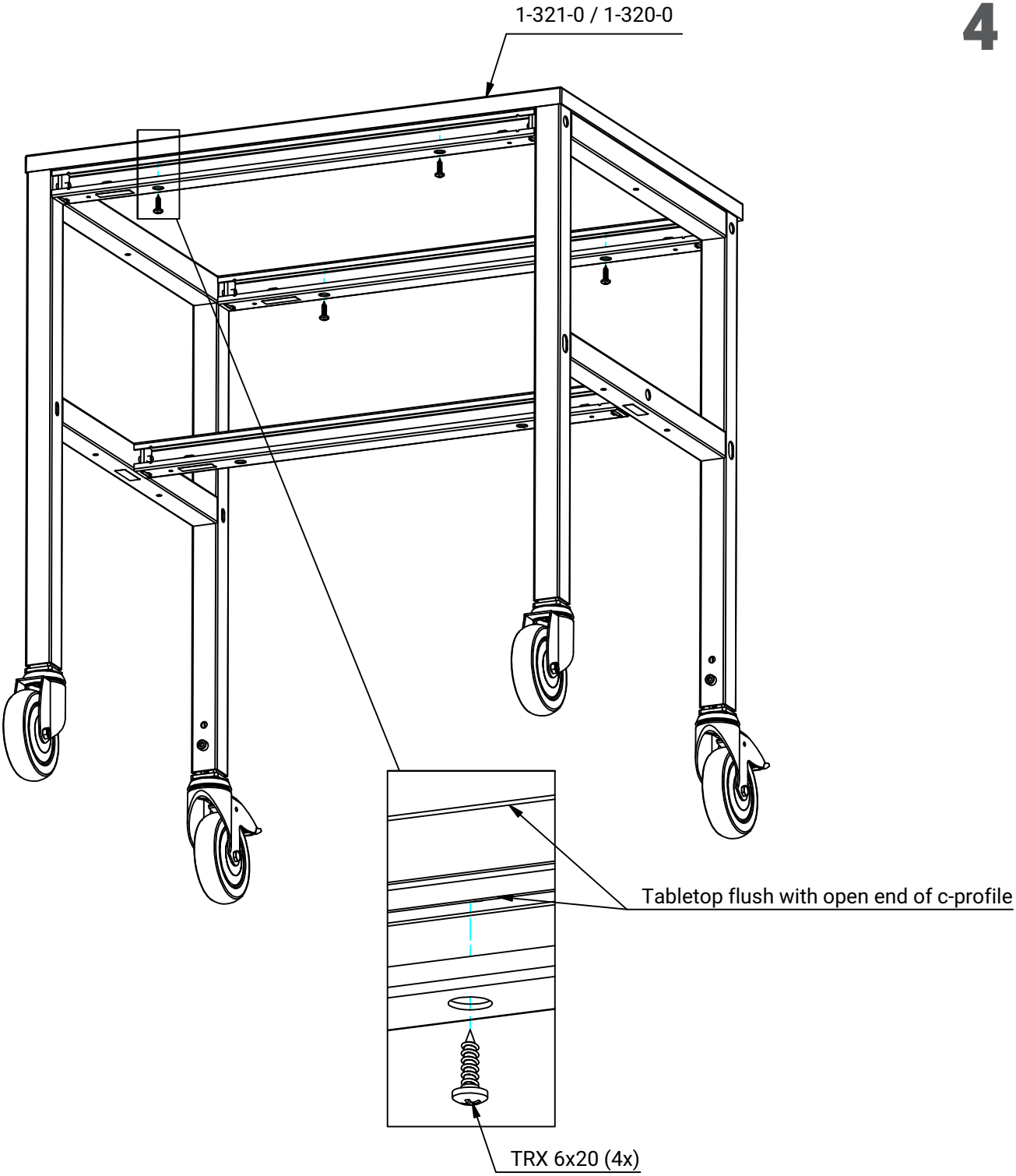
1-321-0 / 1-320-0
Tabletop flush with open end of c-profile
TRX 6x20 (4x)

5

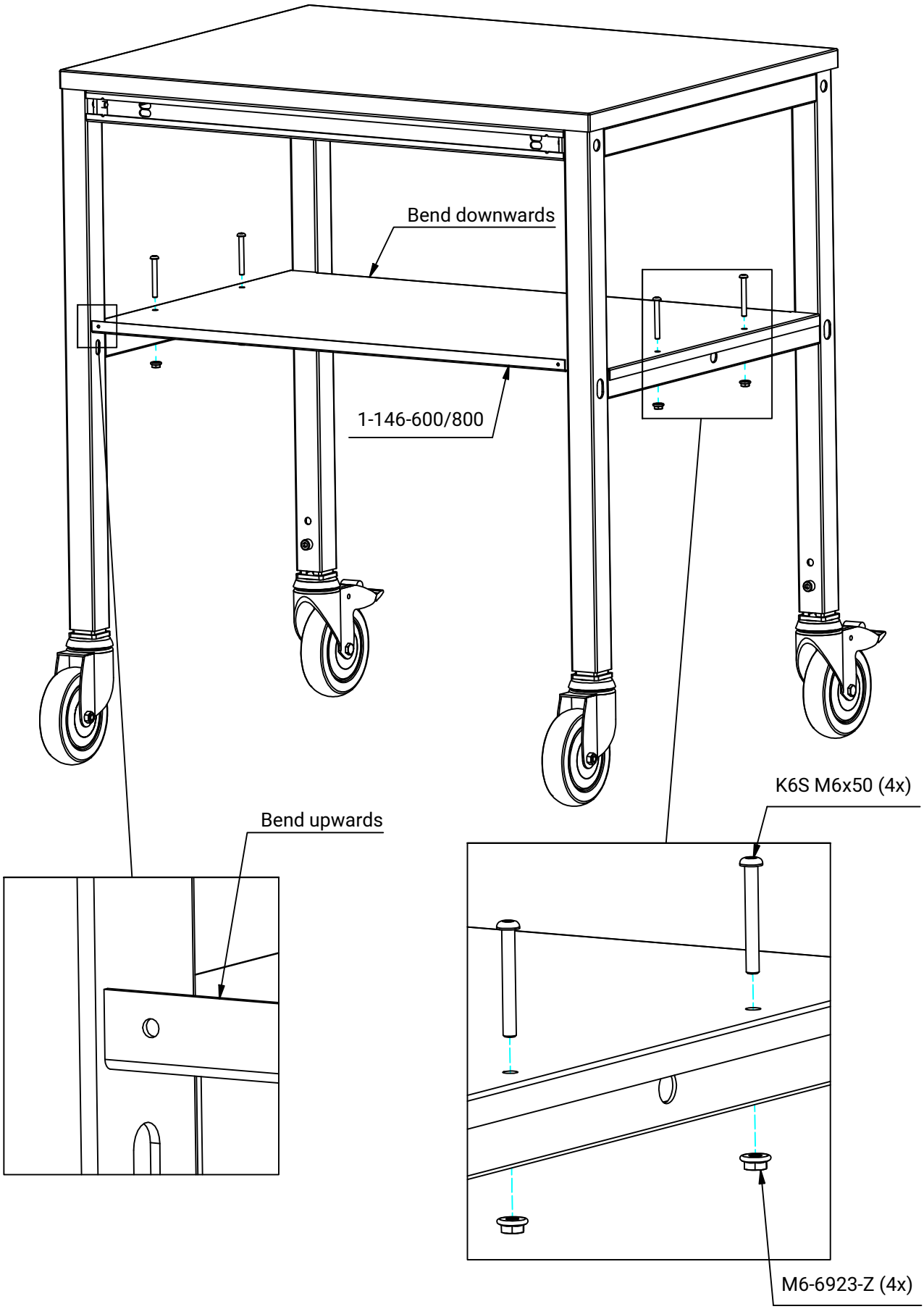
Bend downwards
1-146-600/800
K6S M6x50 (4x)
Bend upwards
M6-6923-Z (4x)
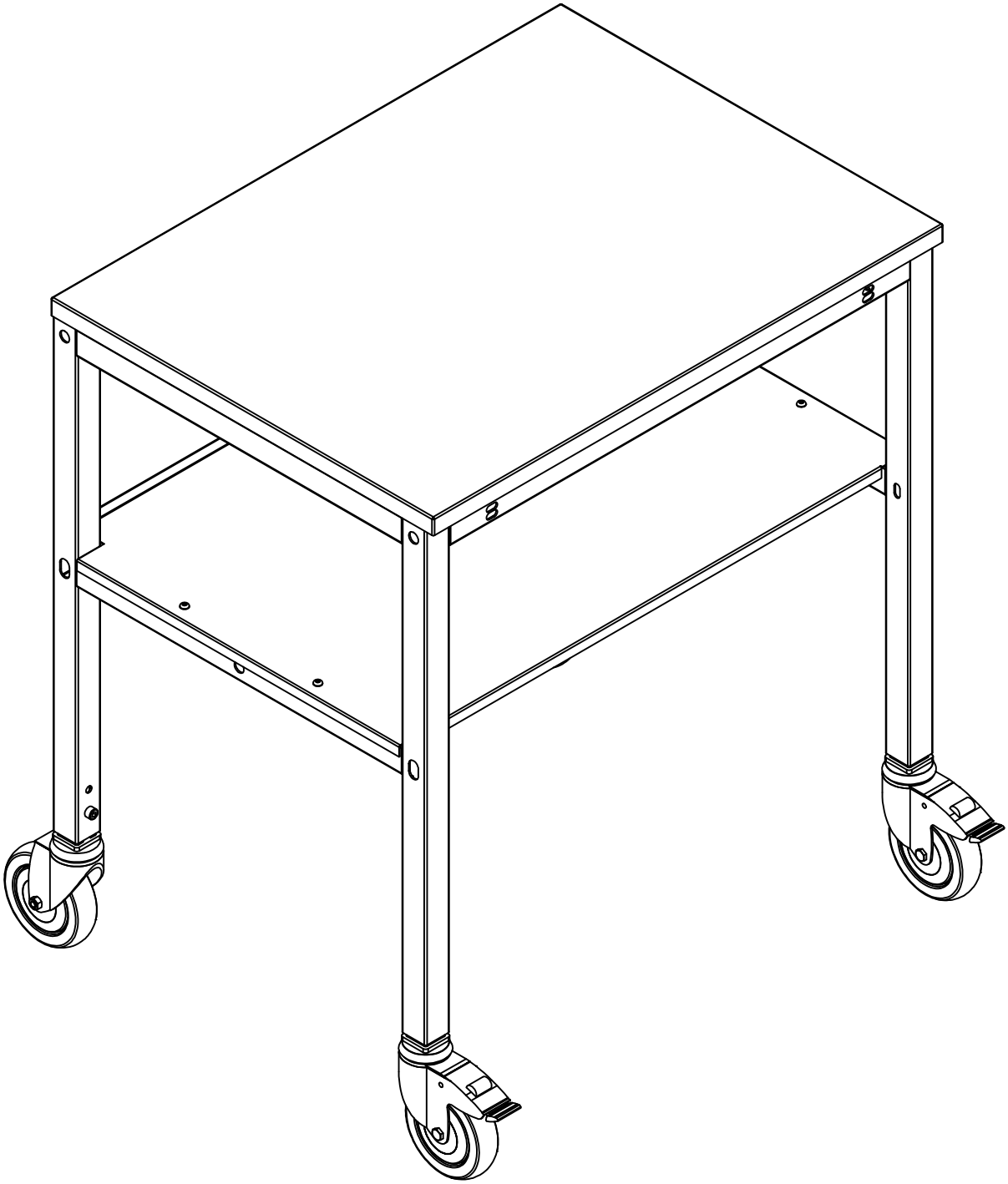
6