# 4-430

## Forklift Stand Workshop Cabinet HD500

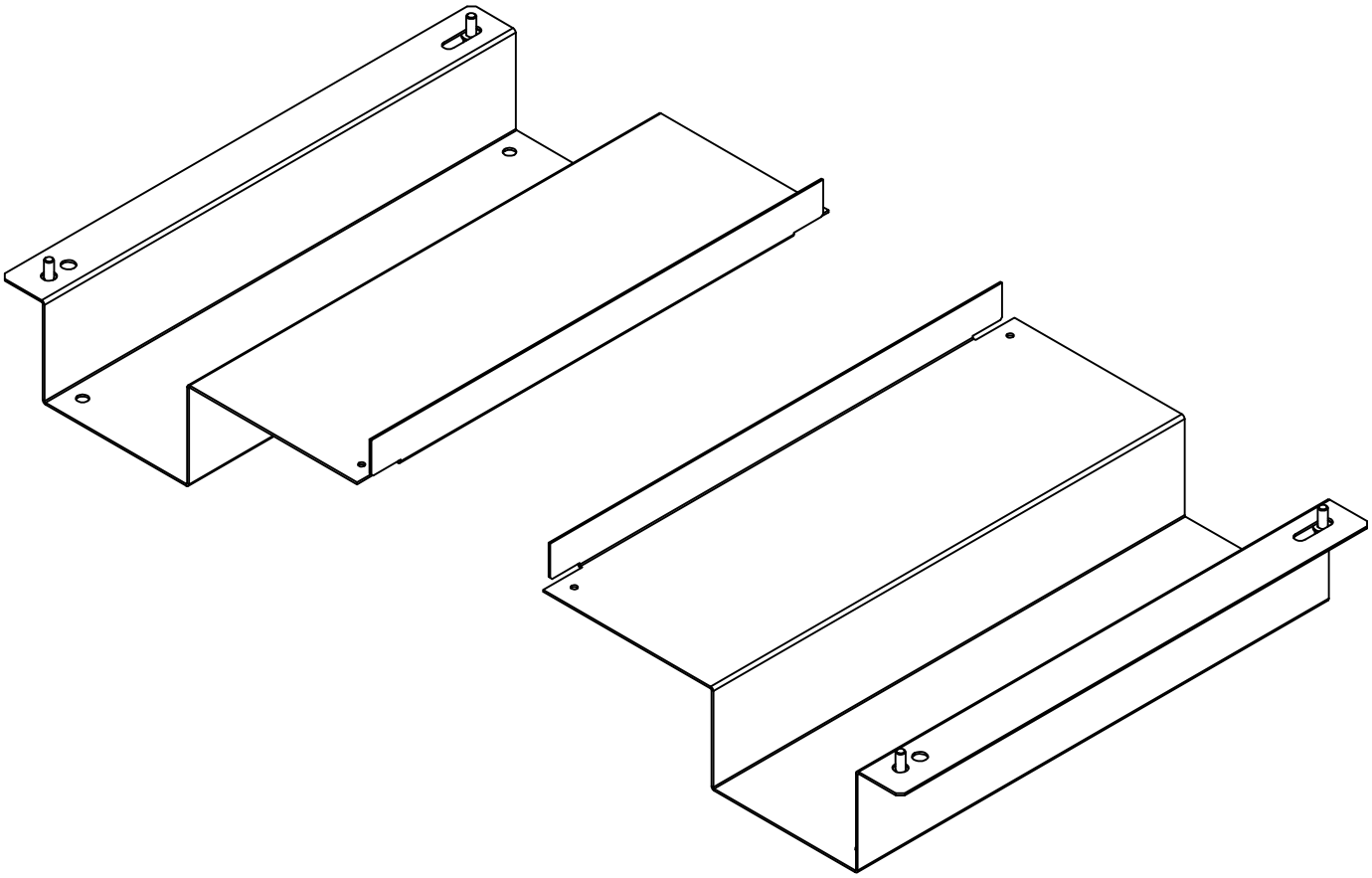

1

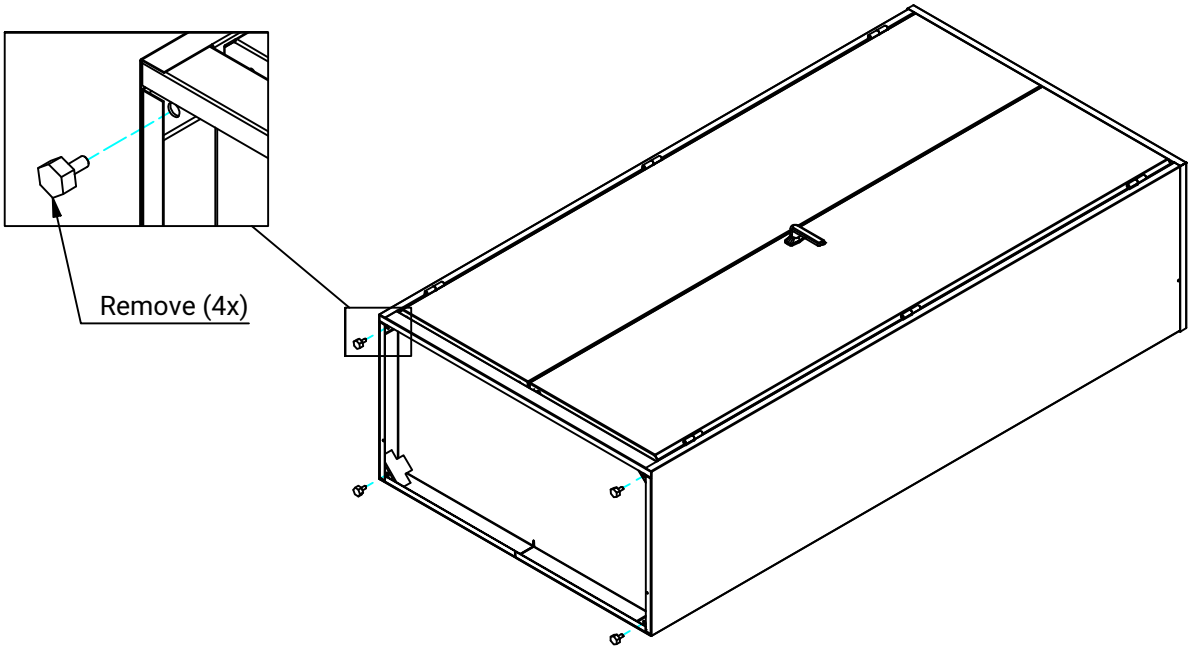


2

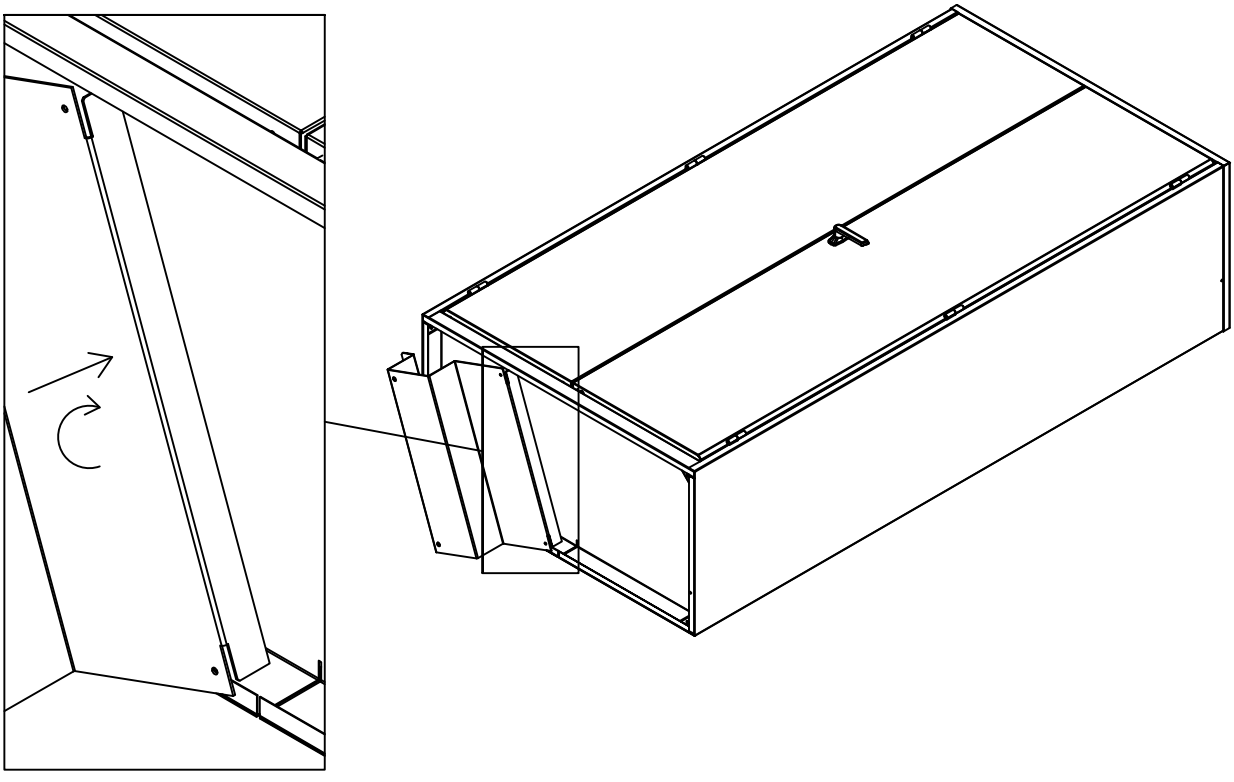

3

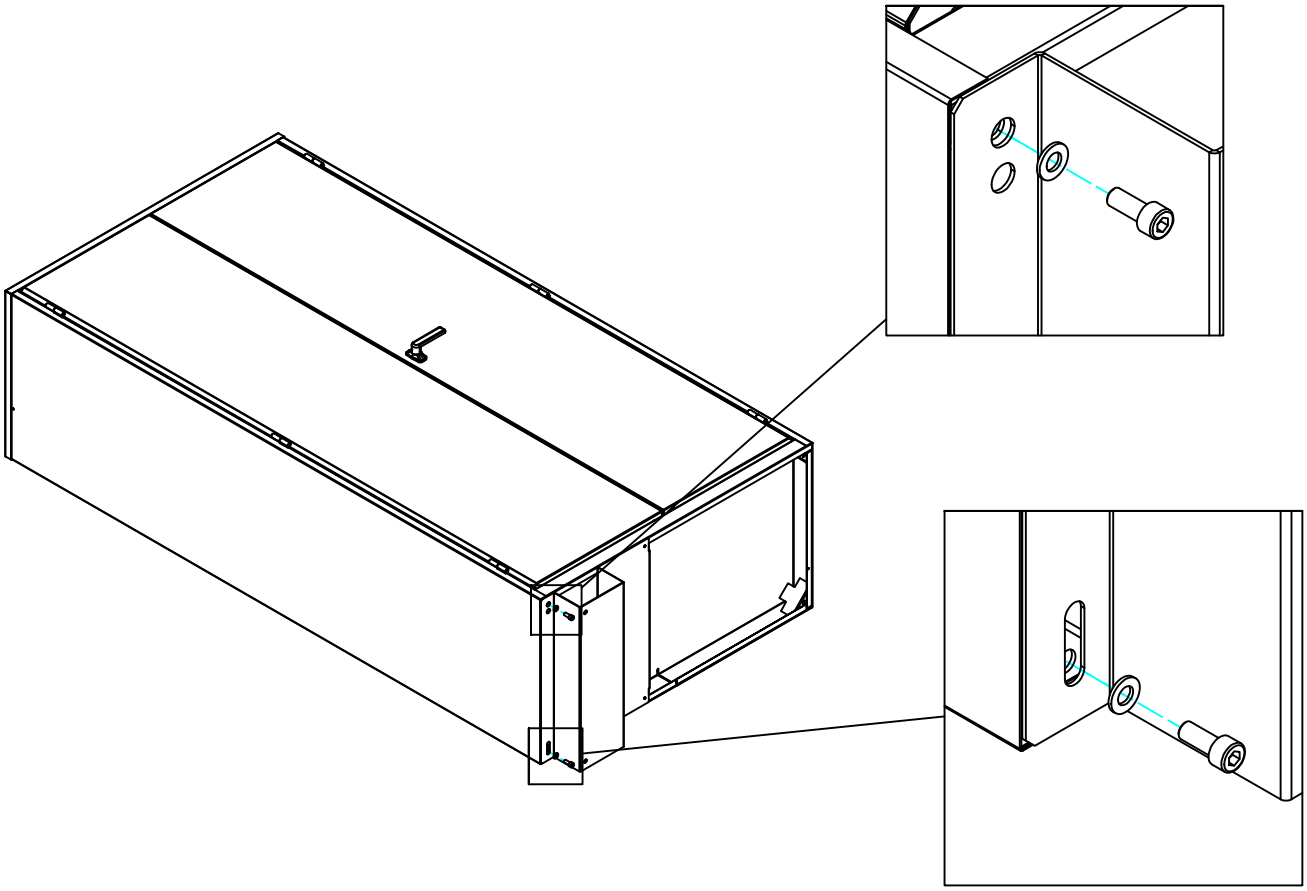

4

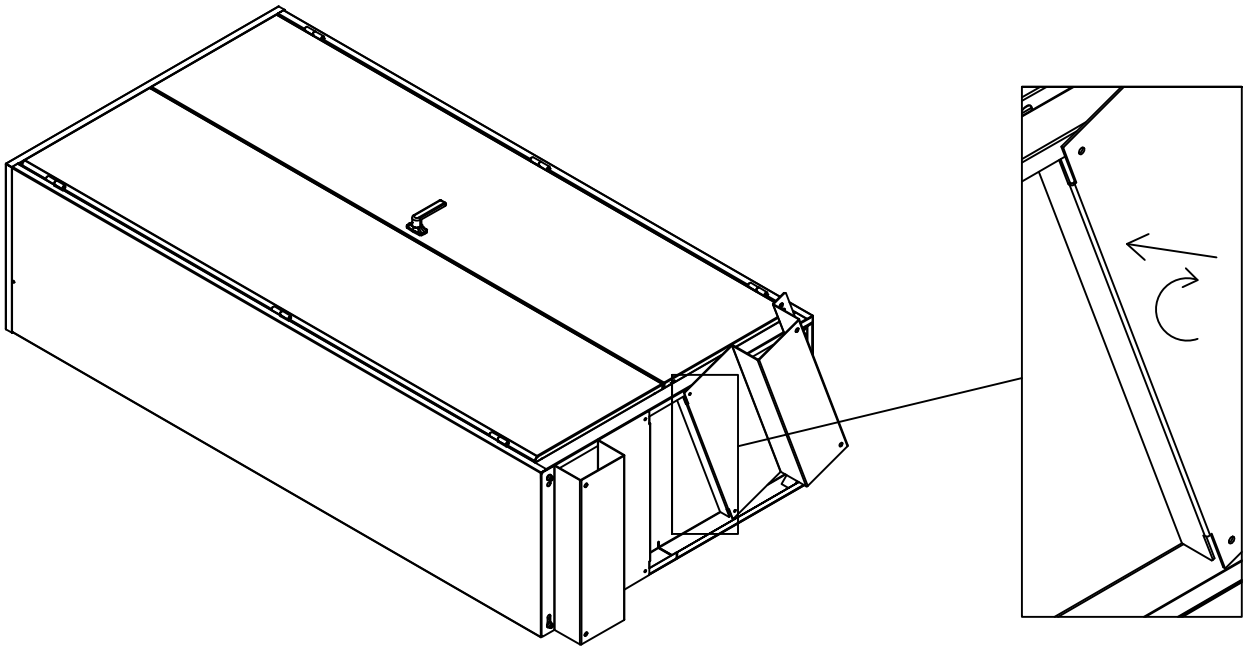

5

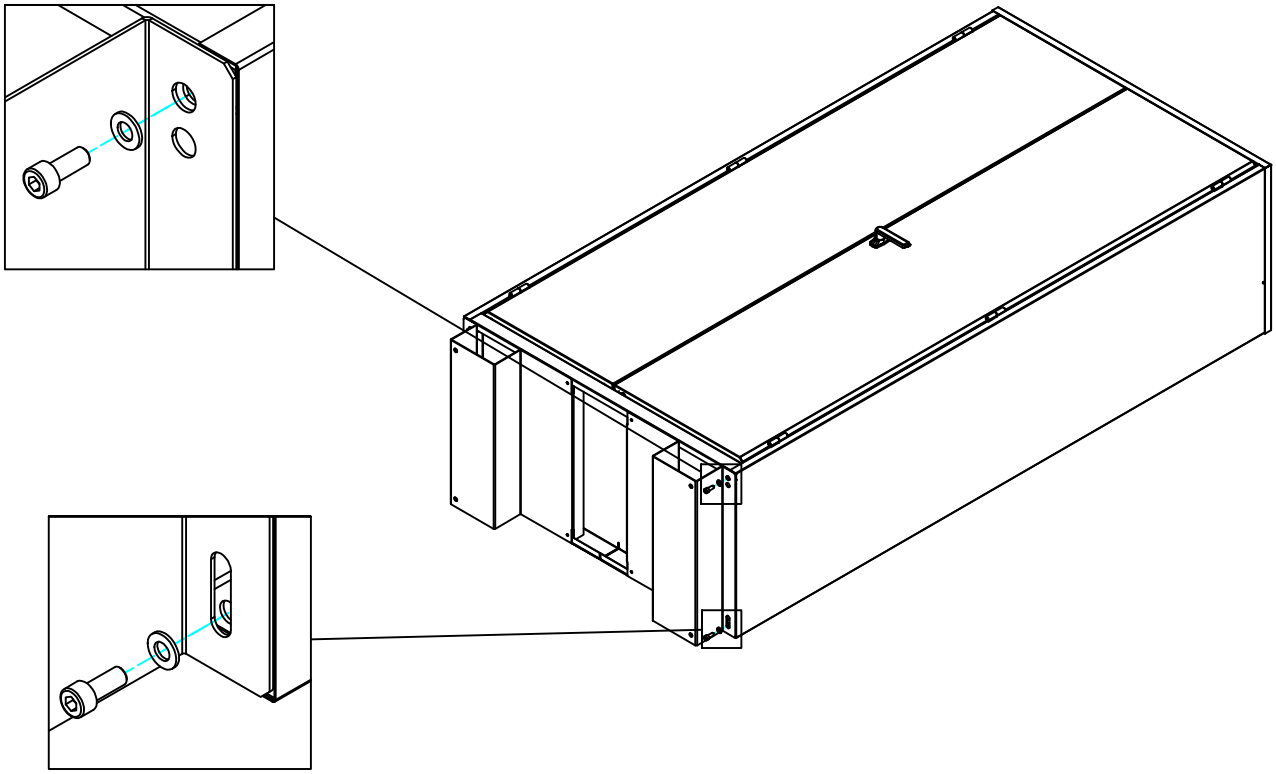

6

